ACJ110-8W 1A TRIAC

Rev.A.1.1

DESCRIPTION:

The ACJ110-8W triac is suitable for general purpose AC switching. It can be used as an ON/OFF function in applications such as heating regulation, induction motor starting circuits, for phase control operation in light dimmers, motor speed controllers. The ACJ110-8W embeds a TVS structure to absorb the inductive turn-off energy such as those described in the IEC 61000-4-5 standards. At the same time, the triac shields the positive signal trigger to reduce the probability of product misoperation. It is triggered with a negative gate current flowing out of the gate pin. Package SOT-223-2L is RoHS compliant.

MAIN FEATURES

ABSOLUTE MAXIMUM RATINGS

Parameter	Symbol	Value	Unit
Storage junction temperature range	T_{stg}	-40-150	
Operating junction temperature range	T_j	-40-125	
Repetitive peak off-state voltage (T_j=25)	V_{DRM}	800	V
Repetitive peak reverse voltage (T_j=25)	V_{RRM}	800	V
RMS on-state current (T_C 093)	$I_{T(RMS)}$	1	A
Non repetitive surge peak on-state current (full cycle , t_p=20ms , T_j=25)	I_{TSM}		

ORDERING INFORMATION

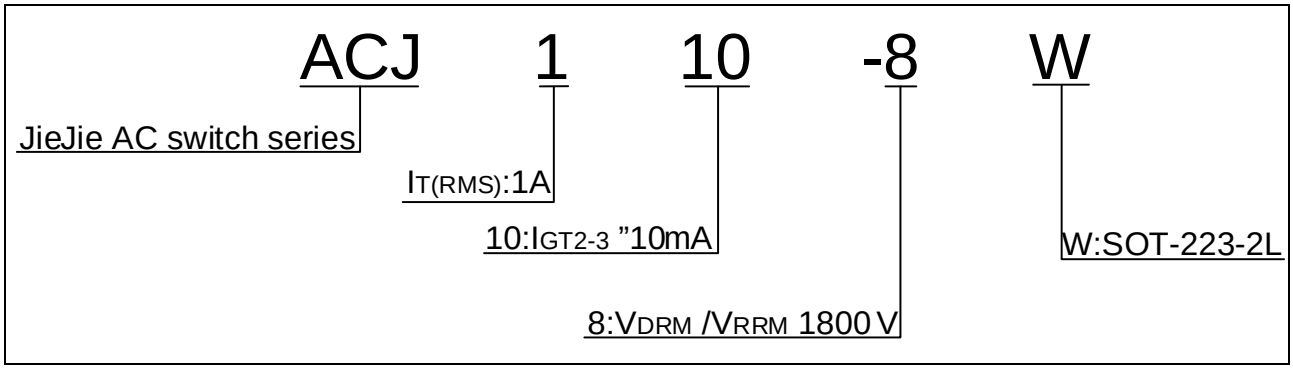

MARKING

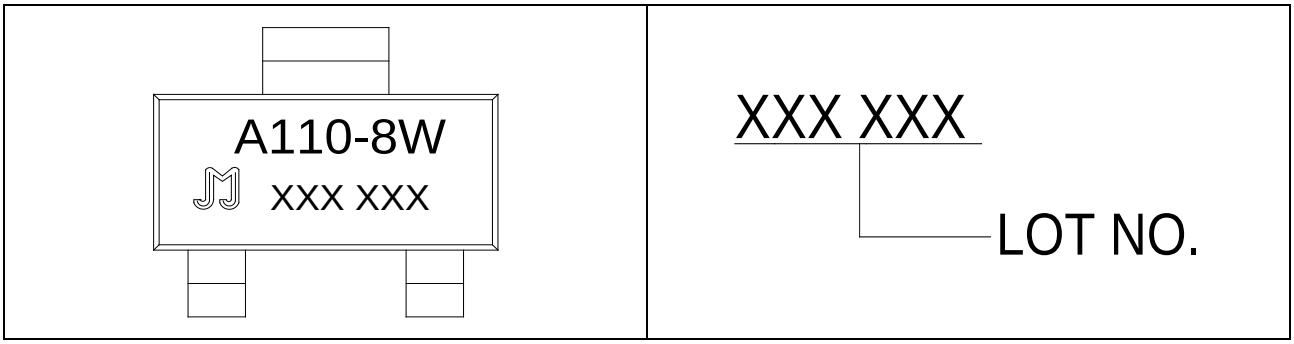

ORDERING INFORMATION

Order code	Voltage V_{DRM}/V_{RRM} (V)	IGT(mA)	Package	Base qty. (pcs)	Delivery mode
ACJ110-8W	800	10	SOT-223-2L	4,000	Tape & Reel

Document Revision History

Date	Revision	Changes
Apr.13, 2023	A.1.0	Last updated
Oct.24, 2025	A.1.1	Revise PACKAGE MECHANICAL DATA