T0410H-8H 4A TRIAC

Rev.A.1.1

DESCRIPTION:

The T0410H-8H triac is suitable for general purpose AC switching. It can be used as an ON/OFF function in applications such as heating regulation, induction Ø ή ɔ ę γ l M l M D

ORDERING INFORMATION

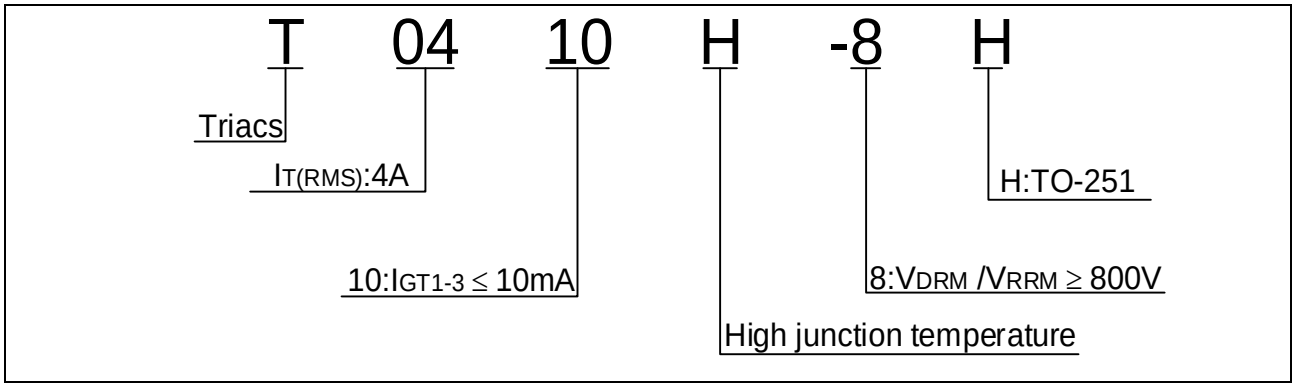

MARKING

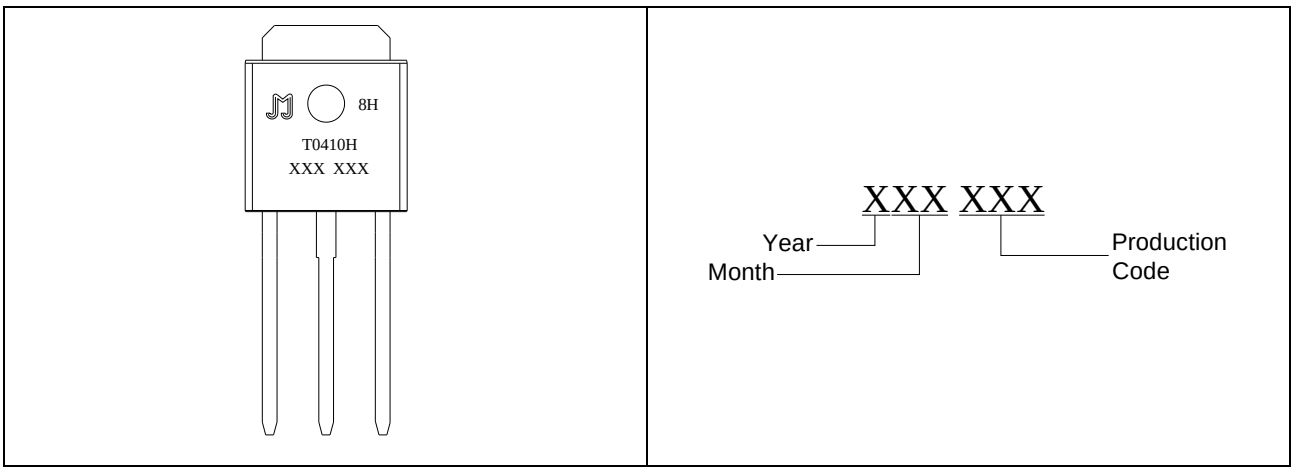

FIG.1: Maximum power dissipation versus RMS on-state current

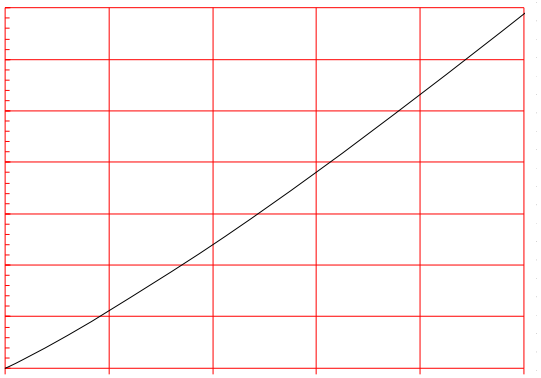

FIG.2: RMS on-state current versus case temperature

FIG.7 Test circuit for inductive and resistive loads to IEC-61000-4-5 standards

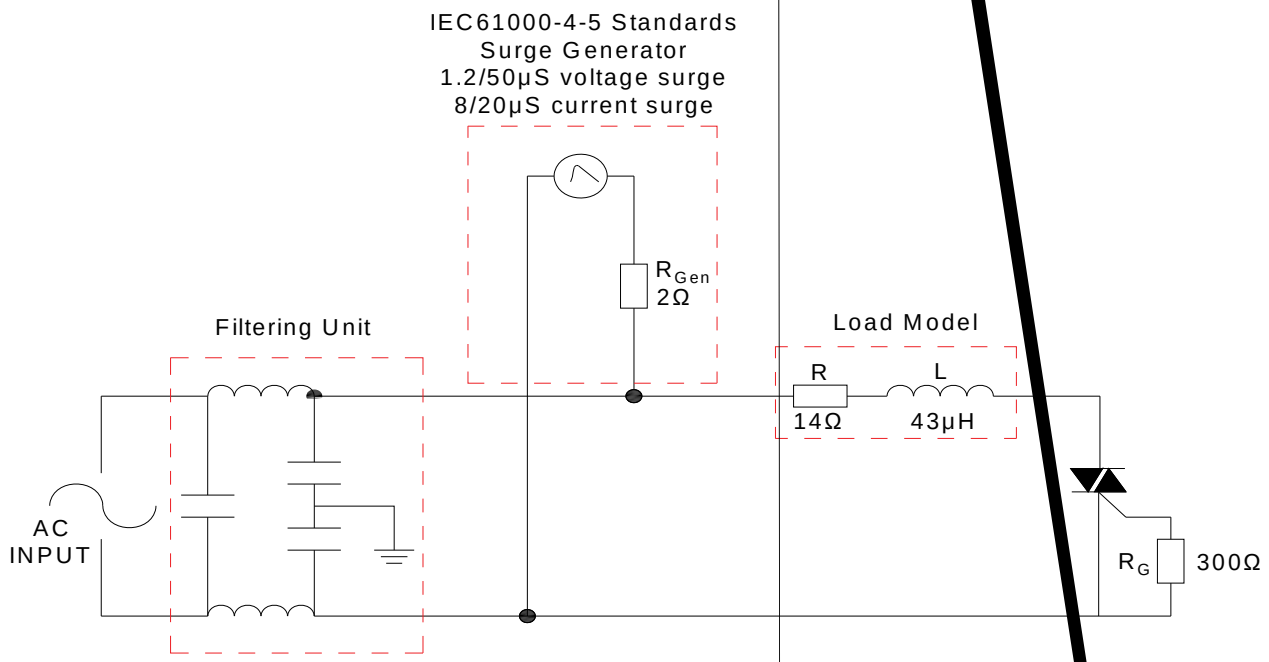

ORDERING INFORMATION

Order code	Voltage V_{DRM}/V_{RRM} (V)	IGT(mA)	Package	Base qty. (pcs)	Delivery mode
		I - II - III			
T0410H-8H	800	10	TO-251	80	Tube

Document Revision History

Date	Revision	Changes
Apr.10, 2023	A.1.0	Last updated
Oct.17, 2025	A.1.1	Revise PACKAGE MECHANICAL DATA

PACKAGE MECHANICAL DATA

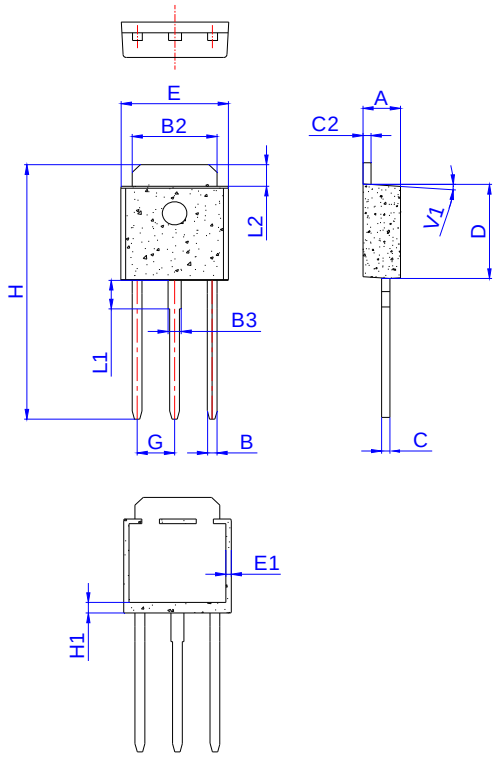

Ref.	Dimensions					
	Millimeters			Inches		
	Min.	Typ.	Max.	Min.	Typ.	Max.
A	2.20		2.40	0.086		0.095
A2	1.00		1.30	0.039		0.051
B	0.50		0.70	0.020		0.028
B2	5.10		5.40	0.200		0.213
B3						
C						
C2						
D						
E						
E1	0.60		1.00	0.024		0.039
G						
H	16.00		17.00	0.630		0.669
H1	1.45		1.85	0.057		0.073
L1						

Information furnished in this document is believed to be accurate and reliable. However, Jiangsu JieJie Microelectronics Co., Ltd. assumes no responsibility for the consequences of use without consideration for such information nor use beyond it. Information mentioned in this document is subject to change without notice, apart from that when an agreement is signed, Jiangsu JieJie complies with the agreement.

Products and information provided in this document have no infringement of patents. h]