Peak pulse voltage (T_j=25 ; non-repetitive,off-state;FIG.8)	V_{pp}	4	kV

ELECTRICAL CHARACTERISTICS (T_j=25 unless otherwise specified)

Symbol	Test Condition	Quadrant	Value		Unit
I_{GT}	V_D =12V R_L =33Ω	- -	MAX.	20	mA
V_{GT}		- -	MAX.	1	V
V_{GD}	V_D =V_{DRM} T_j =150 R_L =3.3kΩ	- -	MIN.	0.2	V
I_L	I_G =1.2I_{GT}	-	MAX.	30	mA
				40	
I_H	I_T =100mA		MAX.	25	mA
dV/dt	V_D=400V Gate Open T_j =150		MIN.	1000	V/μs
(dI/dt)c	(dV/dt)c=20V/μs, T_j=150		MIN.	5	A/ms
t_{on}	I_G=40mA I_A=200mA I_R=20mA T_j=25		TYP.	3	μs
t_{off}				30	

STATIC CHARACTERISTICS

Symbol	Parameter		Value(MAX.)	Unit
V_{TM}	I_{TM} =5.5A t_p=380μs	T_j=25	1.4	V
V_{TO}	Threshold voltage	T_j=150	0.6	V
R_D	Dynamic resistance	T_j=150	129	mΩ
I_{DRM}	V_D =V_{DRM} V_R =V_{RRM}	T_j=25	5	μA
I_{RRM}		T_j=150	0.8	mA

THERMAL RESISTANCES

Symbol	Parameter	Value	Unit
$R_{th(j-c)}$	junction to case (AC)	2.5	/W
$R_{th(j-a)}$	junction to ambient (AC, in free air, S=2cm^2)	55	/W

ORDERING INFORMATION

T 04 20 H -6 E -/

- T: Triacs
- 04: $I_{T(RMS)}$:4A
- 20: $I_{GT1-3} \leq 20mA$
- H: High junction temperature
- -6: V_{DRM} /$V_{RRM} \geq 600V$
- E: E:TO-263
- -/: Blank:Tube; -TR:Tape & Reel

MARKING

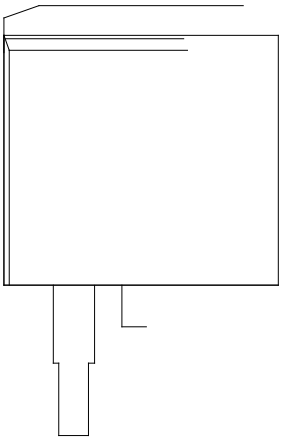

FIG.7: Relative variations of gate trigger current, holding current and latching current versus junction temperature

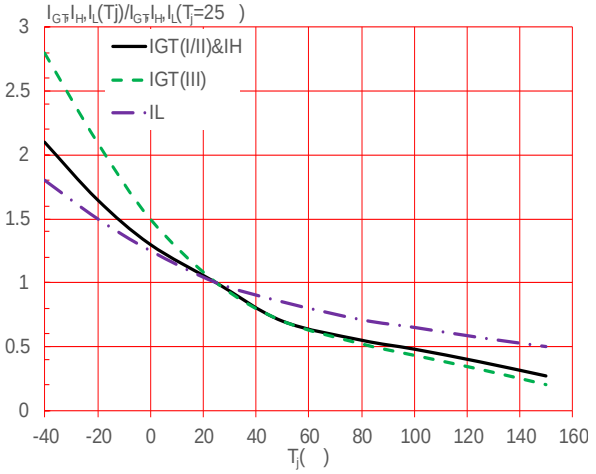

DELIVERY MODE

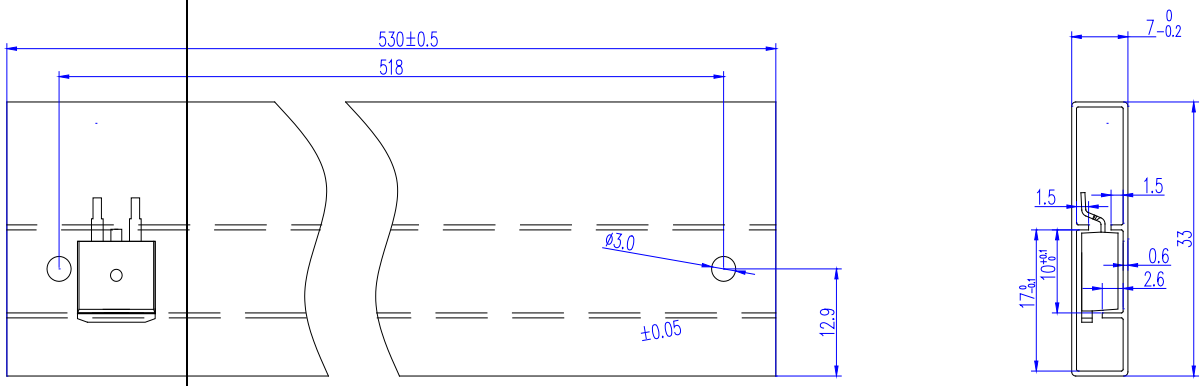

PACKAGE	OUTLINE	TUBE (PCS)	INNER BOX (PCS)	PER CARTON

Information furnished in this document is believed to be accurate and reliable. However, Jiangsu JieJie Microelectronics Co., Ltd. assumes no responsibility for the consequences of use without consideration for such information nor use beyond it. Information mentioned in this document is subject to change without notice, apart from that when an agreement is signed, Jiangsu JieJie complies with the agreement.
Products and information provided in this document have no infringement of patents. Jiangsu JieJie assumes no responsibility for any infringement of other rights of third