JST08E-1200CW 8A TRIAC

Rev.A.1.1

DESCRIPTION:

The JST08E-1200CW triac is suitable for general purpose AC switching. It can be used as an ON/OFF function in applications such as heating regulation, induction motor starting circuits, for phase control operation in light dimmers, motor speed controllers. JST08E-1200CW snubberless triac is especially recommended for use on inductive loads. Package TO-263 is RoHS compliant.

MAIN FEATURES

ABSOLUTE MAXIMUM RATINGS

Parameter	Symbol	Value	Unit
Storage junction temperature range	T_{stg}	-40-150	
Operating junction temperature range	T_j	-40-125	
Repetitive peak off-state voltage (T_j=25)	V_{DRM}	1200	V
Repetitive peak reverse voltage (T_j=25)	V_{RRM}	1200	V
RMS on-state current (T_C 01 07)	$I_{T(RMS)}$	8	A
Non repetitive surge peak on-state current (full cycle , t_p=20ms , T_j=25)	I_{TSM}	80	A
Non repetitive surge peak on-state current (full cycle , t_p=16.6ms , T_j=25)		88	
I^2t value for fusing (t_p=10ms , T_j=25)	I^2t	32	A^2s
Critical rate of rise of on-state current (I_G=2× I_{GT} , f=100Hz , T_j=125)	dI/dt	100	A s

JST08E-1200CW

FIG.7: Relative variations of gate trigger current, holding current and latching current versus junction temperature

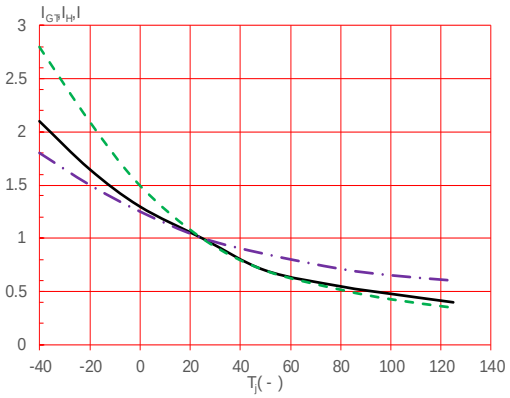

ORDERING INFORMATION

Order code	Voltage V_{DRM}/V_{RRM} (V)	IGT(mA)	Package	Base qty. (pcs)	Delivery mode
		H- I- J			
JST08E-1200CW	1200	35	TO-263	50	Tube
JST08E-1200CW-TR				800	Tape & Reel

Document Revision History

Date	Revision	Changes
Apr.11, 2023	A.1.0	Last updated
Oct.20, 2025	A.1.1	Revise PACKAGE MECHANICAL DATA
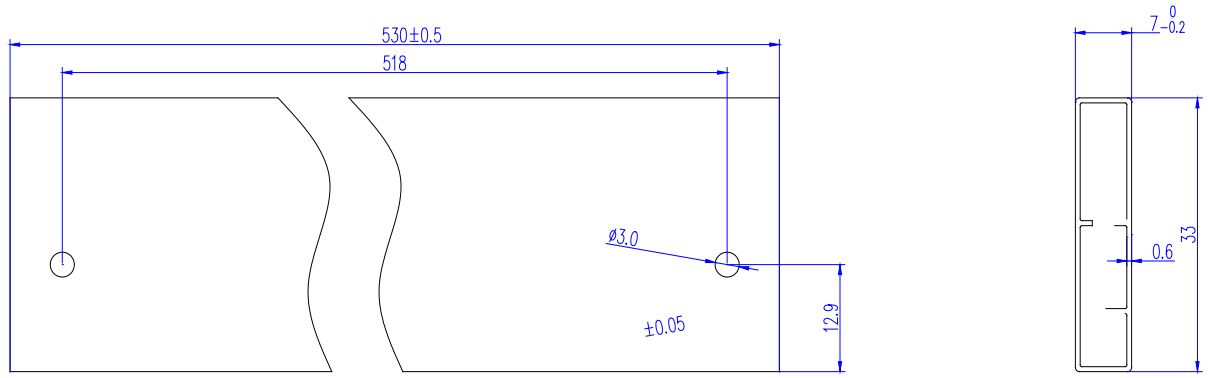
DELIVERY MODE