ORDERING INFORMATION

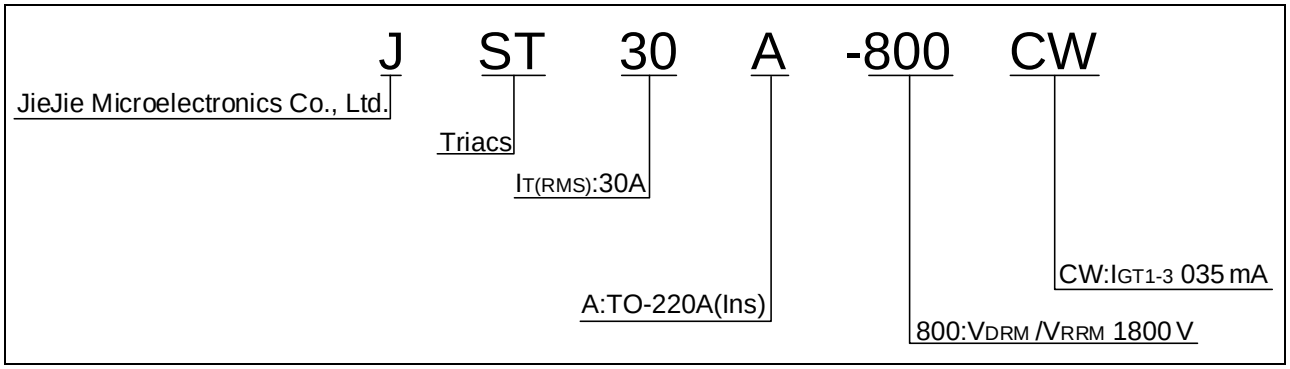

MARKING

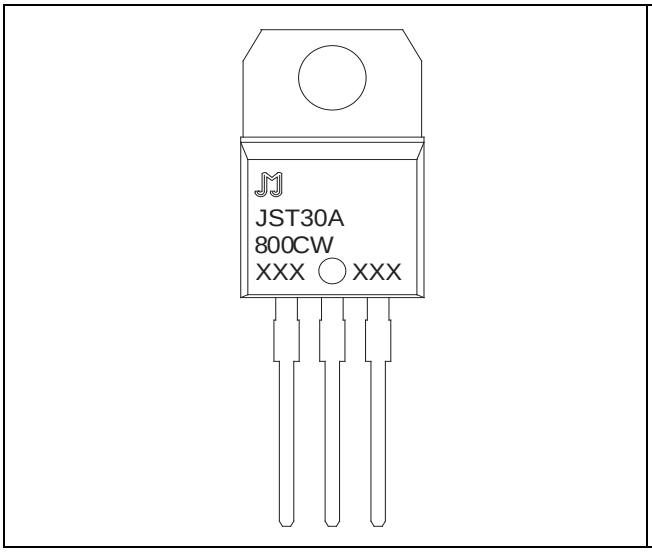

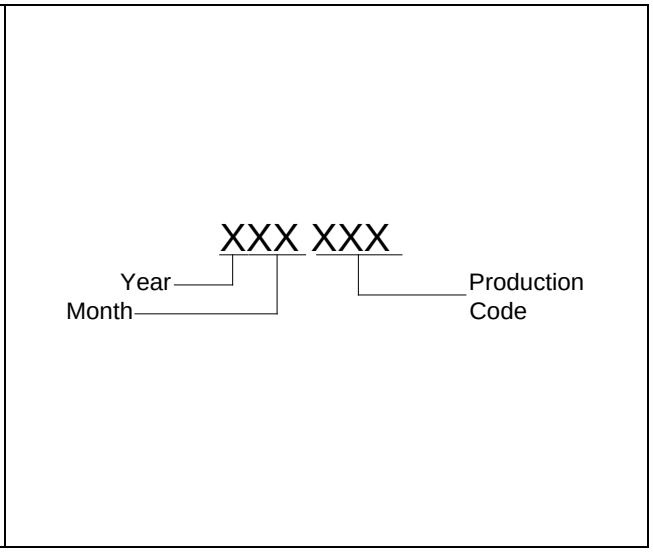

FIG.7 ÖTest circuit for inductive and resistive loads to IEC-61000-4-5 standards

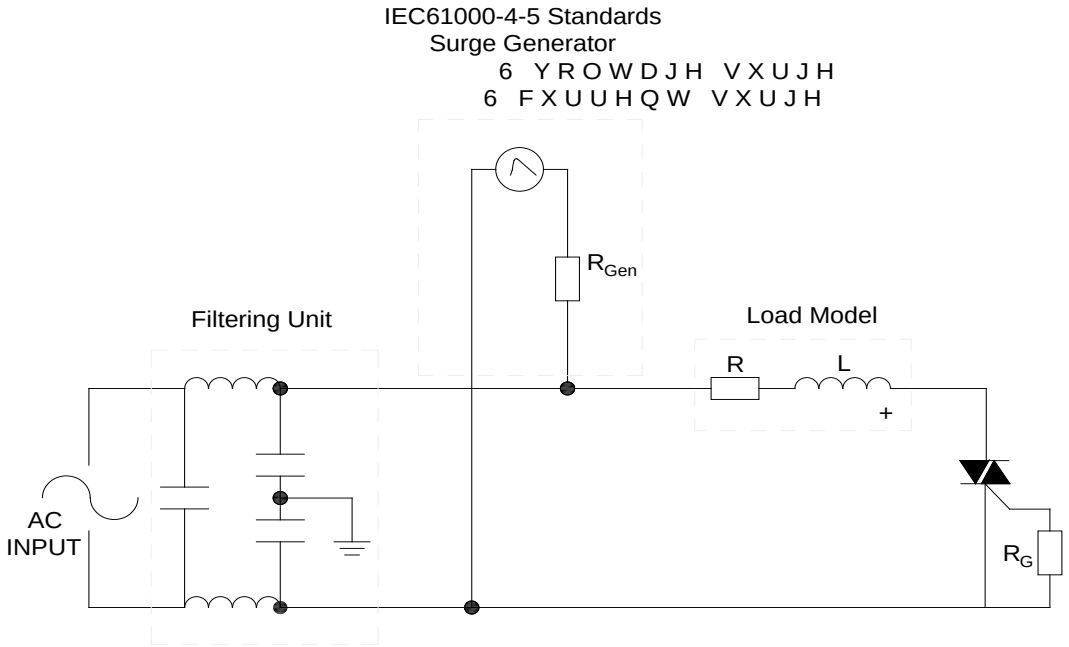

ORDERING INFORMATION

Order code	Voltage V_{DRM}/V_{RRM} (V)	IGT(mA)	Package	Base qty. (pcs)	Delivery mode
		H- I- J			
JST30A-800CW	800	35	TO-220A(Ins)	50	Tube

Document Revision History

Date	Revision	Changes
Apr.11, 2023	A.1.0	Last updated
Oct.13, 2025	A.1.1	Revise PACKAGE MECHANICAL DATA